The contribution to the stress from electromechanical coupling is readily estimated from the constitutive relation, eq. (4.1). Under conditions of uniaxial strain and field, and for an open circuit, we find that the elastic stiffness is increased by the multiplying factor $(1 + K^2)$ where $K^2 = e_{111}^2/(\varepsilon_{11}^{\eta} C_{1111}^{E})$, the square of the *electromechanical coupling factor* for uniaxial strain, is a measure of the stiffening effect of the electric field. Values of K^2 for various materials are: X-cut quartz, 0.008; Z-cut lithium niobate, 0.055; Y-cut lithium niobate, 0.074; barium titanate ceramic, 0.5; PZT-5H ceramic, 0.75. These examples show that electromechanical coupling effects can be expected to vary from barely detectable to quite substantial.

Stuetzer [67S2, 67S3] and Thurston [74T1] have determined the coupled response of *linear* piezoelectrics to step loading, while both Lysne [72L2] and Thurston [74T1] have obtained solutions for the corresponding problem for weakly-coupled nonlinear piezoelectrics. In each case the short-circuit current exhibits the same initial jump as for the uncoupled solution, with the current at later times being greater in the coupled than the uncoupled case by an amount that depends on the electromechanical coupling factor for the material and the mechanical boundary conditions to which the sample disk is subjected.

Chen et al. [76C2] and Lawrence and Davison [77L1] have recently placed the fully-coupled nonlinear theory of uniaxial piezoelectric response in a form that is convenient for numerical solution of problems and have simulated a number of experiments in terms of this theory. An example of the results obtained is given below.

From a constitutive relation of the form, $\boldsymbol{t} = \boldsymbol{t}(\boldsymbol{D}, \boldsymbol{\eta})$, it can be readily shown that, since there is no change in electric displacement in an open-circuit, thick-sample configuration, there are no secondary stresses due to electromechanical coupling. Nevertheless, the wavespeed is that of a piezoelectrically stiffened wave.

4.2.2. Experimental

The piezoelectric behavior of both quartz and lithium niobate has been studied in a series of careful, systematic investigations. The experimental arrangement is as shown in fig. 4.1. (For more detail see [65G1, 70I1, 72G3, 75G4].) The impactor, preferably the same material as the piezoelectric sample (or perhaps another standard material), is accelerated to a preselected velocity and impacted, in vacuum, upon the sample. Measured quantities include the impactor velocity immediately prior to impact and the short-circuited current pulse produced during the passage of the shock through the sample. Based on eq. (4.6), each experiment yields a value for piezoelectric polarization at a given strain; a collection of such data over a wide range of strain permits the linear and nonlinear piezoelectric constants to be determined. The current-pulse amplitude can be measured to an accuracy of $\pm 1\%$ and, since the impact velocities from which strains are computed are known to $\pm 0.1\%$, overall accuracies are excellent. Error in shock velocity does not cause error in determination of the piezoelectric stress constants.

Typical current pulses observed for X-cut quartz, Z-cut lithium niobate and Y-cut lithium niobate are shown in fig. 4.2. Following a sharp rise in current to an initial value (the initial risetime is due to tilt), the wave shapes show either modest increases in current during the wave transit time for quartz and Z-cut lithium niobate samples, or large increases in current for Y-cut lithium niobate samples. Given our previous discussions of electromechanical coupling, it can be determined that the large increase in current with time in Y-cut lithium niobate is an indication of the pronounced influence of such coupling. It should be noted that current pulse distortions are also significant from samples without proper guard rings [65G1] and subtle but significant distortions

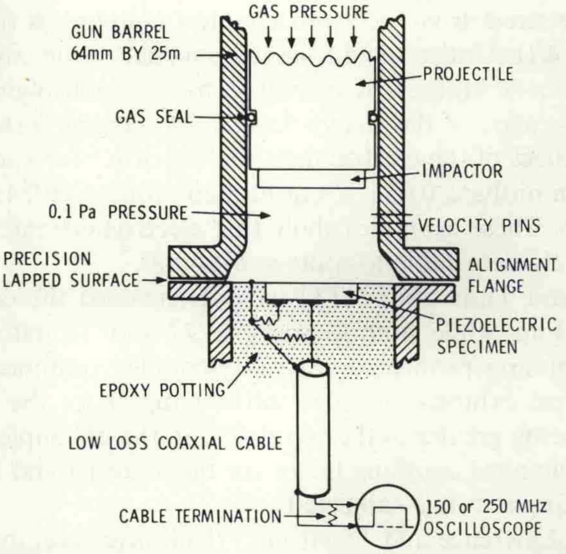

Fig. 4.1. Well-controlled, precisely known strain pulses are applied to piezoelectric samples by impacting them with plates accelerated to a preselected velocity with a smooth-bore compressed gas gun. Misalignment, or "tilt", between the impacting surfaces is typically controlled to within about 250 μrad to assure that the entire face of the sample is impacted in a time short compared to shock-wave transit time. The impact velocity is measured to an accuracy of $\pm 0.1\,\%$. The short-circuit current pulse resulting from the impact is displayed on high-speed oscilloscopes.

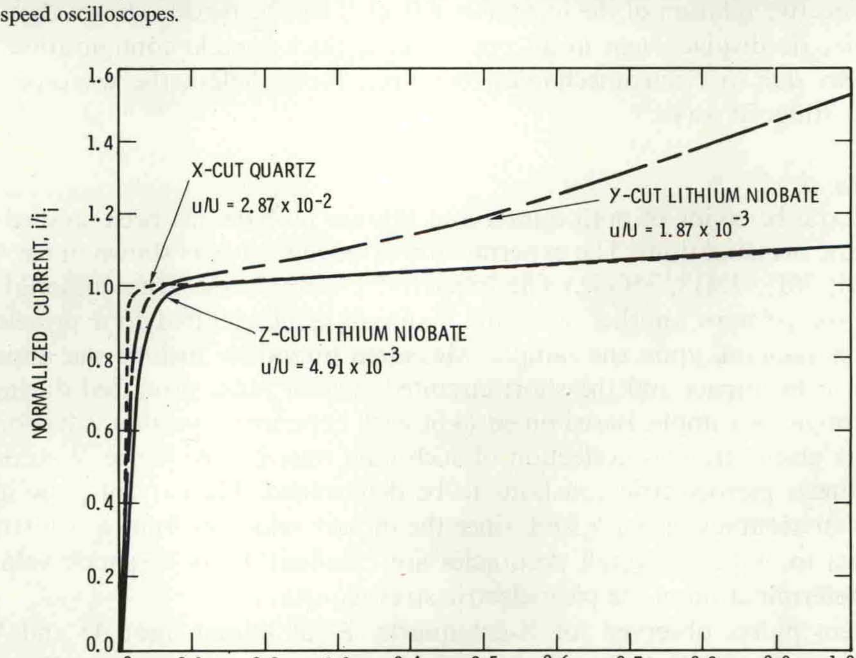

Fig. 4.2. Typical current pulse wave shapes from piezoelectric specimens impacted in the elastic range differ from each other due to the magnitude of the strain, change in permittivity and electromechanical coupling. The typical pulses shown for X-cut quartz [72G3] and Z-cut lithium niobate [77G6] do not deviate greatly from a rectangular shape. However, the typical pulse for Y-cut lithium niobate [77G6] is not rectangular due to the pronounced effect of electromechanical coupling. Most of the deviation from a constant current for quartz is due to finite amplitude strain while that for Z-cut lithium niobate is due to electromechanical coupling (see fig. 4.3). The initial risetime is due to "tilt" between the impactor and sample.